General tolerances ISO 2768-m						Index	Date	Visum	Modification	Index	Date	Visum	Modification
Basic-size	...6	> 6 ...30	> 30 ...120	>120 ...400	> 400 ...1000								
medium	±0.1	±0.2	±0.3	±0.5	±0.8								

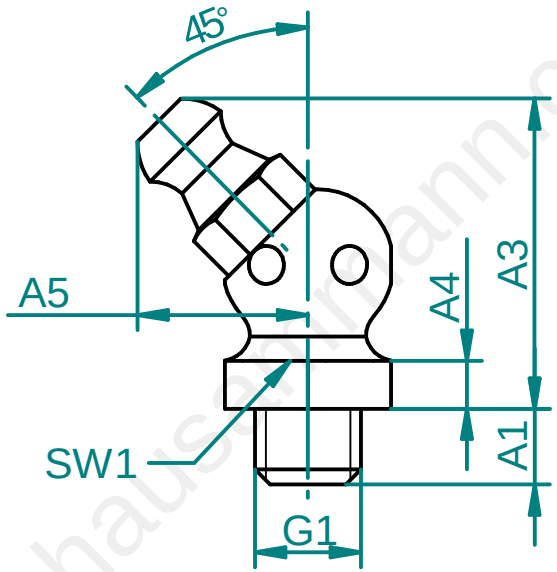

www.hausammann.com

Specifications points D,K,H	
D= doc.points	
K= critical	
H= main	

Accord-draw.no.:
Origin-draw.no.:
Replacement for:

Material:
Edelstahl Rostfrei

HAUSAMMANN KOMPONENTEN PRODUKTION SYSTEME

Scale 2:1

	Date	Visum	Phone
plotted	27.06.11	E.Z	
checked			

05.064

Solid Edge

Format A4

Index 00

© 2010, Für dieses Dokument behalten wir uns alle Rechte vor. © 2 010, Nous nous reservons tous les droites sur ce document © 2 010, We reserve all rights in connection with this document